GigaDevice Semiconductor Inc.

GD32L233C-START
Arm® Cortex®-M23 32-bit MCU

User Guide

Revision 1.2

(Aug. 2026)

Table of Contents

Table of Contents 1
List of Figures 3
List of Tables 4
1. Summary 5
2. Function Pin Assign 6
3. Getting started 7
4. Hardware layout overview 8
4.1. Power supply 8
4.2. Boot option 8
4.3. LED 8
4.4. KEY 9
4.5. USART 9
4.6. USB 9
4.7. GD-Link 10
4.8. Arduino 10
4.9. MCU 11
5. Routine use guide 12
5.1. GPIO_Running_LED 12
5.1.1. DEMO purpose 12
5.1.2. DEMO running result 12
5.2. GPIO_Key_Polling_mode 12
5.2.1. DEMO purpose 12
5.2.2. DEMO running result 12
5.3. EXTI_Key_Interrupt_mode 13
5.3.1. DEMO purpose 13
5.3.2. DEMO running result 13
5.4. USART_HyperTerminal_Interrupt 13
5.4.1. DEMO purpose 13
5.4.2. DEMO running result 13
5.5. TIMER_Key_EXTI 14
5.5.1. DEMO purpose 14
5.5.2. DEMO running result 14
5.6. USBD_CDC_ACM 14
5.6.1. DEMO purpose 14
5.6.2. DEMO running result 15
6. Revision history 16

List of Figures

Figure 4-1. Schematic diagram of power supply 8
Figure 4-2. Schematic diagram of boot option 8
Figure 4-3. Schematic diagram of LED function 8
Figure 4-4. Schematic diagram of Key function 9
Figure 4-5. Schematic diagram of USART 9
Figure 4-6. Schematic diagram of USB 9
Figure 4-7. Schematic diagram of GD-Link 10
Figure 4-8. Schematic diagram of Arduino 10
Figure 4-9. Schematic diagram of MCU 11

List of Tables

Table 2-1. Function pin assignment 6
Table 6-1. Revision history 16

1. Summary

GD32L233C-START uses GD32L233CCT6 as the main controller. It uses GD-Link Mini USB interface to supply 5V power. Reset, Boot, Button key, LED, USB and USART to USB interface are also included. For more details, please refer to GD32L233C-START_Rev1.0 schematic.

2. Function Pin Assign

Table 2-1. Function pin assignment

Function	Pin	Description
LED	PA7	LED1
	PA8	LED2
	PC6	LED3
	PC7	LED4
RESET		Reset
KEY	PA0	K2(Wakeup key)
USART	PA9	USART0_TX
	PA10	USART0_RX
USB	PA11	USB_DM
	PA12	USB_DP

3. Getting started

The EVAL board uses GD-Link Mini USB connecter to get power DC +5V, which is the hardware system normal work voltage. A GD-Link on board is necessary in order to download and debug programs. Select the correct boot mode and then power on, the LEDPWR will turn on, which indicates the power supply is OK.

There are Keil version and IAR version of all projects. Keil version of the projects are created based on Keil MDK-ARM 5.26 uVision5. IAR version of the projects are created based on IAR Embedded Workbench for ARM 8.32.1. During use, the following points should be noted:
1. If you use Keil uVision5 to open the project. In order to solve the "Device Missing (s)" problem, you can install GigaDevice.GD32L23x_DFP_1.0.0.
2. If you use IAR to open the project, install IAR_GD32L23x_ADDON_1.0.0.exe to load the associated files.

4. Hardware layout overview

4.1. Power supply

Figure 4-1. Schematic diagram of power supply

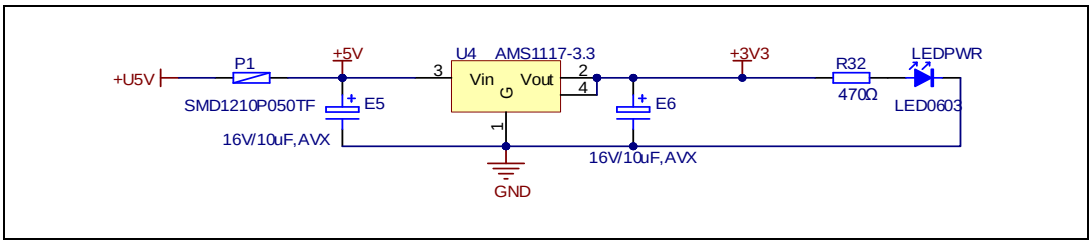

4.2. Boot option

Figure 4-2. Schematic diagram of boot option

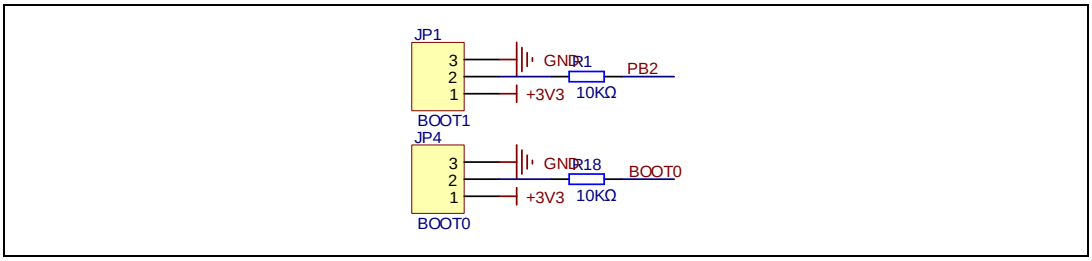

4.3. LED

Figure 4-3. Schematic diagram of LED function

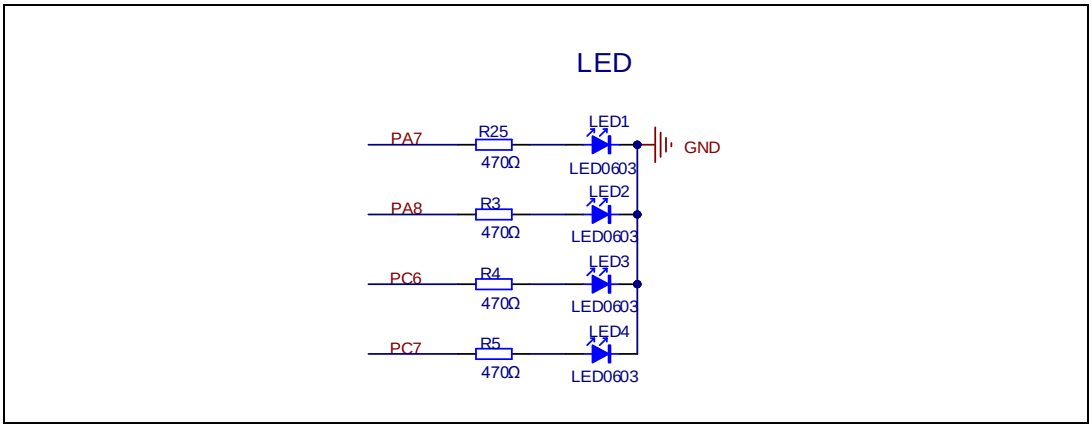

4.4. KEY

Figure 4-4. Schematic diagram of Key function

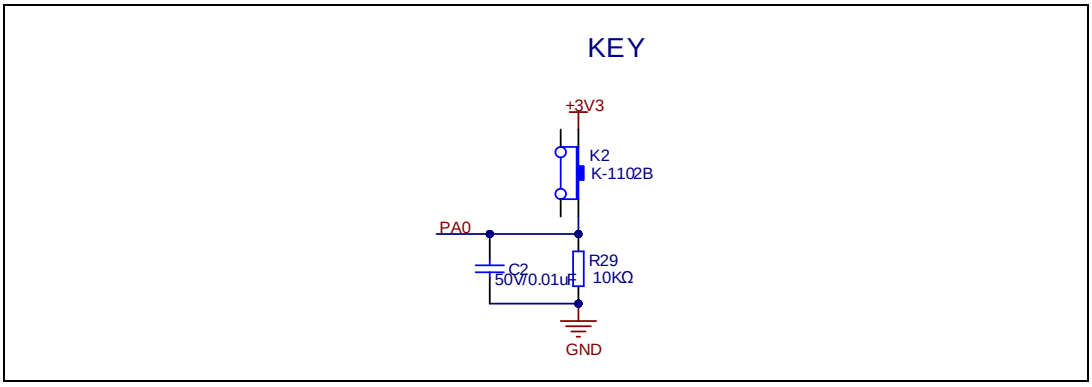

4.5. USART

Figure 4-5. Schematic diagram of USART

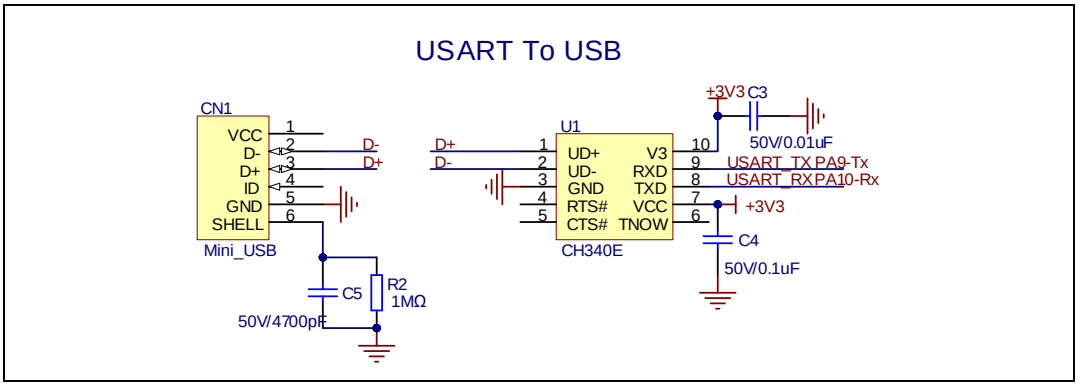

4.6. USB

Figure 4-6. Schematic diagram of USB

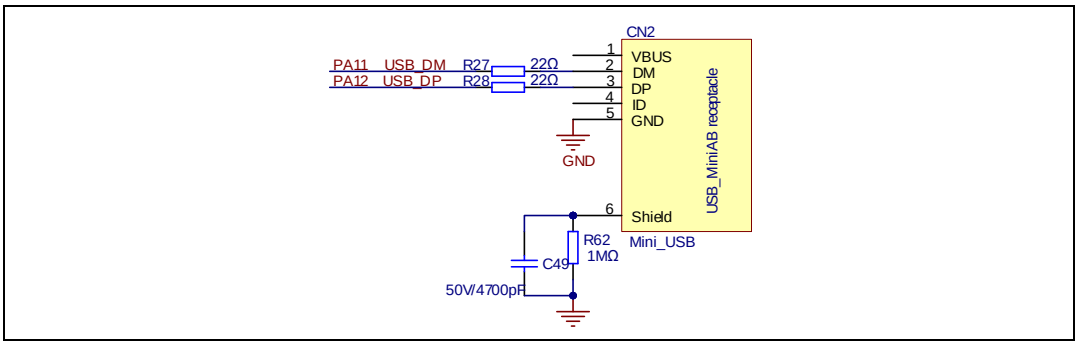

4.7. GD-Link

Figure 4-7. Schematic diagram of GD-Link

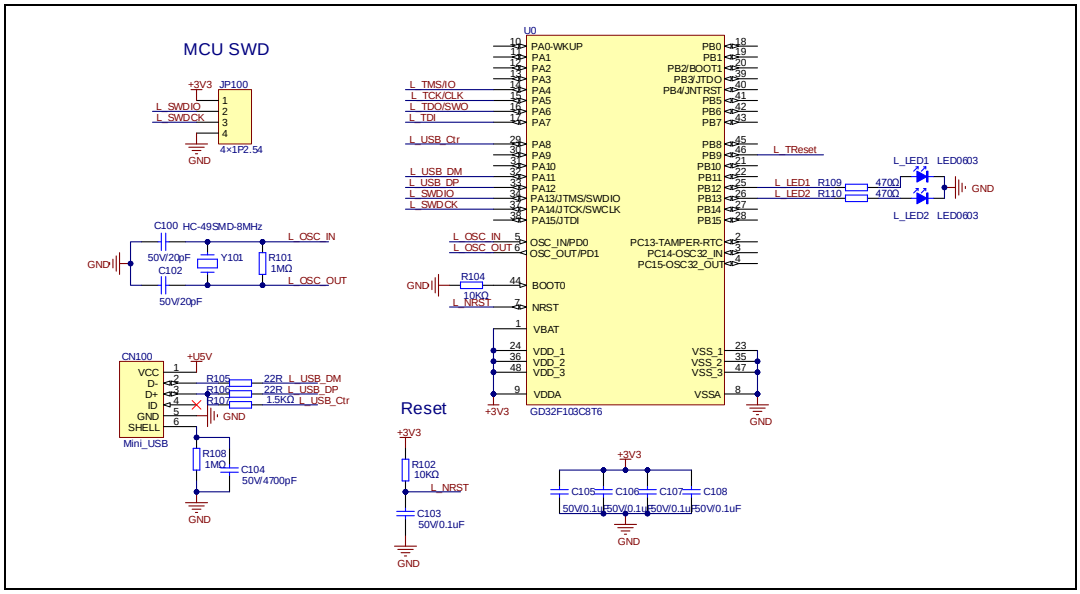

4.8. Arduino

Figure 4-8. Schematic diagram of Arduino

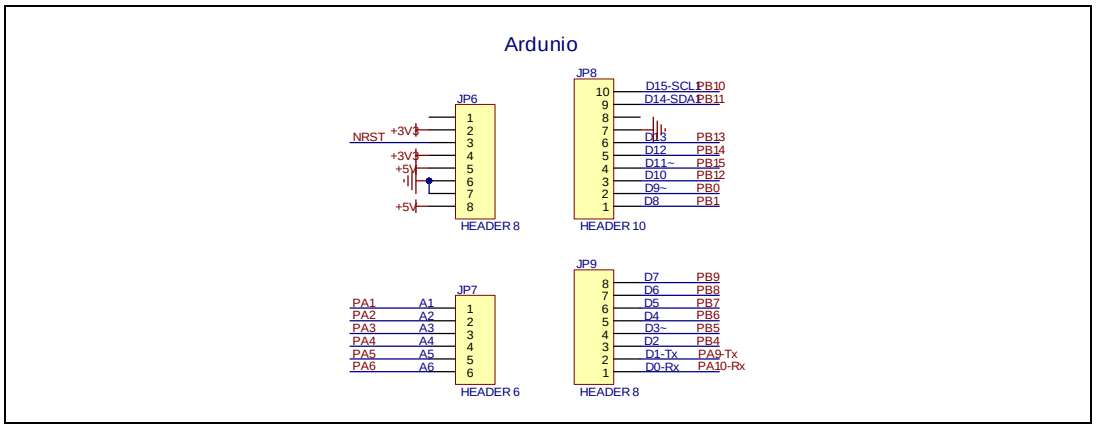

4.9. MCU

Figure 4-9. Schematic diagram of MCU

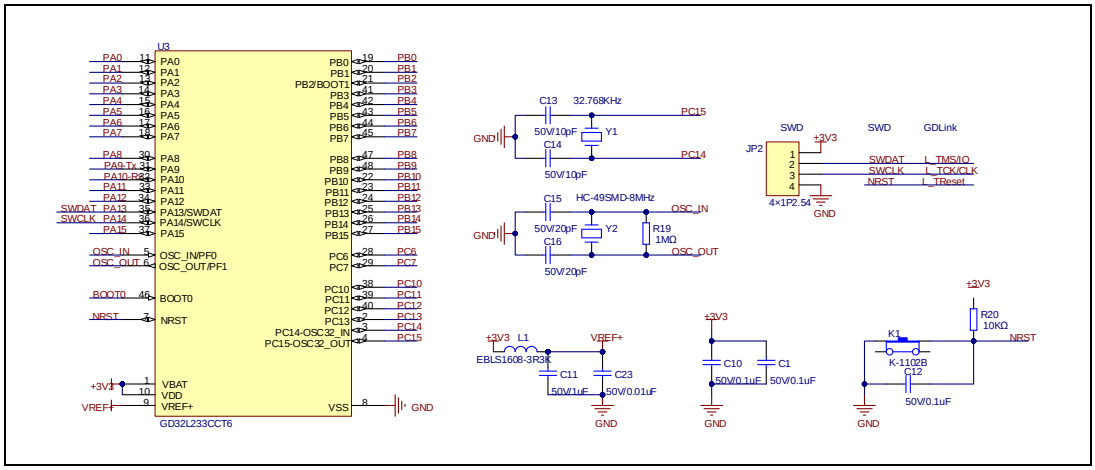

5. Routine use guide

5.1. GPIO_Running_LED

5.1.1. DEMO purpose

This demo includes the following functions of GD32 MCU:

- Learn to use GPIO control the LED
- Learn to use SysTick to generate 1ms delay

GD32L233C-START board has two user keys and four LEDs. The keys are Reset key and Wakeup key. The LEDs are controlled by GPIO.

This demo will show how to light the LEDs.

5.1.2. DEMO running result

Download the program < 01_GPIO_Running_LED > to the START board, four LEDs can light cycles.

5.2. GPIO_Key_Polling_mode

5.2.1. DEMO purpose

This demo includes the following functions of GD32 MCU:

- Learn to use GPIO control the LED and the KEY
- Learn to use SysTick to generate 1ms delay

GD32L233C-START board has two user keys and four LEDs. The keys are Reset key and Wakeup key. The LEDs are controlled by GPIO.

This demo will show how to use the Wakeup key to control the LED2. When press down the Wakeup key, it will check the input value of the IO port. If the value is 0 and will wait for 100ms. Check the input value of the IO port again. If the value still is 0, it indicates that the button is pressed successfully and toggle LED2.

5.2.2. DEMO running result

Download the program < 02_GPIO_Key_Polling_mode > to the START board, press down the Wakeup key, LED2 will be turned on. Press down the Wakeup key again, LED2 will be turned off.

5.3. EXTI_Key_Interrupt_mode

5.3.1. DEMO purpose

This demo includes the following functions of GD32 MCU:

- Learn to use GPIO control the LED and the KEY.
- Learn to use EXTI to generate external interrupt.

GD32L233C-START board has two user keys and four LEDs. The keys are Reset key and Wakeup key. The LED1, LED2, LED3 and LED4 are controlled by GPIO.

This demo will show how to use the EXTI interrupt line to control the LED2. When press down the Wakeup key, it will produce an interrupt. In the interrupt service function, the demo will toggle LED2.

5.3.2. DEMO running result

Download the program < 03_EXTI_Key_Interrupt_mode > to the START board, LED2 is turned on and off for test. When press down the Wakeup key, LED2 will be turned on. Press down the Wakeup key again, LED2 will be turned off.

5.4. USART_HyperTerminal_Interrupt

5.4.1. DEMO purpose

This demo includes the following functions of GD32 MCU:

- Learn to use the USART transmit and receive interrupts to communicate with the HyperTerminal.

5.4.2. DEMO running result

Download the program <04_USART_HyperTerminal_Interrupt> to the EVAL board and connect serial cable to USART. Firstly, all the LEDs are turned on and off for test. Then, the USART sends the tx_buffer array (from 0x00 to 0xFF) to the hyperterminal and waits for receiving data from the hyperterminal that you must send. The string that you have sent is stored in the rx_buffer array. The receive buffer have a BUFFER_SIZE bytes as maximum. After that, compare tx_buffer with rx_buffer. If tx_buffer is same with rx_buffer, LED1, LED2, LED3, LED4 flash by turns. Otherwise, LED1, LED2, LED3, LED4 toggle together.

The output information via the HyperTerminal is as following:

```
00 01 02 03 04 05 06 07 08 09 0A 0B 0C 0D 0E 0F 10 11 12 13 14 15 16 17 18 19 1A
1B 1C 1D 1E 1F 20 21 22 23 24 25 26 27 28 29 2A 2B 2C 2D 2E 2F 30 31 32 33 34 35
36 37 38 39 3A 3B 3C 3D 3E 3F 40 41 42 43 44 45 46 47 48 49 4A 4B 4C 4D 4E 4F 50
51 52 53 54 55 56 57 58 59 5A 5B 5C 5D 5E 5F 60 61 62 63 64 65 66 67 68 69 6A 6B
6C 6D 6E 6F 70 71 72 73 74 75 76 77 78 79 7A 7B 7C 7D 7E 7F 80 81 82 83 84 85 86
87 88 89 8A 8B 8C 8D 8E 8F 90 91 92 93 94 95 96 97 98 99 9A 9B 9C 9D 9E 9F A0 A1
A2 A3 A4 A5 A6 A7 A8 A9 AA AB AC AD AE AF B0 B1 B2 B3 B4 B5 B6 B7 B8 B9 BA BB BC
BD BE BF C0 C1 C2 C3 C4 C5 C6 C7 C8 C9 CA CB CC CD CE CF D0 D1 D2 D3 D4 D5 D6 D7
D8 D9 DA DB DC DD DE DF E0 E1 E2 E3 E4 E5 E6 E7 E8 E9 EA EB EC ED EE EF F0 F1 F2
F3 F4 F5 F6 F7 F8 F9 FA FB FC FD FE FF
```

5.5. TIMER_Key_EXTI

5.5.1. DEMO purpose

This demo includes the following functions of GD32 MCU:

- Learn to use GPIO control the LED and the KEY
- Learn to use EXTI to generate external interrupt
- Learn to use TIMER to generate PWM

GD32L233C-START board has two keys and four LEDs. The two keys are Reset key and Wakeup key. The LED1, LED2, LED3 and LED4 are controlled by GPIO.

This demo will show how to use the TIMER PWM to trigger EXTI interrupt to toggle the state of LED2 and EXTI interrupt line to control the LED1. When press down the Wakeup Key, it will produce an interrupt. In the interrupt service function, the demo will toggle LED1.

5.5.2. DEMO running result

Download the program <05_TIMER_Key_EXTI> to the START board, all the LED1 and LED2 are flashed once for test, press down the Wakeup Key, LED1 will be turned on. Press down the Wakeup Key again, LED1 will be turned off. Connect PA6 (TIMER2_CH0) and PA4 with DuPont line. The LED2 will be toggled every 500ms.

5.6. USBD_CDC_ACM

5.6.1. DEMO purpose

This demo includes the following functions of GD32 MCU:

- Learn how to use the USBD peripheral
- Learn how to implement USB CDC device

GD32L233C-START board has one USBD interface. In this demo, the GD32L233C-START

board is enumerated as an USB virtual COM port, which was shown in device manager of PC as below. This demo makes the USB device look like a serial port, and loops back the contents of a text file over USB port. To run the demo, input a message using the PC's keyboard. Any data that shows in HyperTerminal is received from the device.

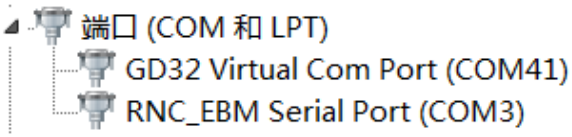

5.6.2. DEMO running result

Download the program <06_USBD_CDC_ACM> to the START board and run. When user input message through computer keyboard, the HyperTerminal will receive and shown the message. For example, when you input "GigaDevice MCU", the HyperTerminal will get and show it as below.

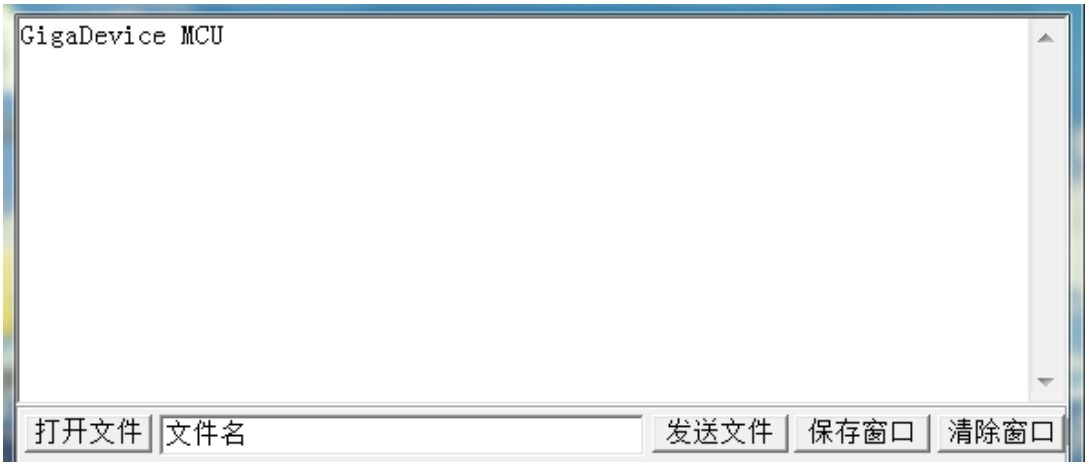

6. Revision history

Table 6-1. Revision history

Revision No.	Description	Date
1.0	Initial Release	Nov.15, 2021
1.1	Update format of some figures.	Jul.18, 2023
1.2	Update the font displayed in the document	Aug.21,2026

Important Notice

This document is the property of GigaDevice Semiconductor Inc. and its subsidiaries (the "Company"). This document, including any product of the Company described in this document (the "Product"), is owned by the Company according to the laws of the People's Republic of China and other applicable laws. The Company reserves all rights under such laws and no Intellectual Property Rights are transferred (either wholly or partially) or licensed by the Company (either expressly or impliedly) herein. The names and brands of third party referred thereto (if any) are the property of their respective owner and referred to for identification purposes only.

To the maximum extent permitted by applicable law, the Company makes no representations or warranties of any kind, express or implied, with regard to the merchantability and the fitness for a particular purpose of the Product, nor does the Company assume any liability arising out of the application or use of any Product. Any information provided in this document is provided only for reference purposes. It is the sole responsibility of the user of this document to determine whether the Product is suitable and fit for its applications and products planned, and properly design, program, and test the functionality and safety of its applications and products planned using the Product. The Product is designed, developed, and/or manufactured for ordinary business, industrial, personal, and/or household applications only, and the Product is not designed or intended for use in (i) safety critical applications such as weapons systems, nuclear facilities, atomic energy controller, combustion controller, aeronautic or aerospace applications, traffic signal instruments, pollution control or hazardous substance management; (ii) life-support systems, other medical equipment or systems (including life support equipment and surgical implants); (iii) automotive applications or environments, including but not limited to applications for active and passive safety of automobiles (regardless of front market or aftermarket), for example, EPS, braking, ADAS (camera/fusion), EMS, TCU, BMS, BSG, TPMS, Airbag, Suspension, DMS, ICMS, Domain, ESC, DCDC, e-clutch, advanced-lighting, etc.. Automobile herein means a vehicle propelled by a self-contained motor, engine or the like, such as, without limitation, cars, trucks, motorcycles, electric cars, and other transportation devices; and/or (iv) other uses where the failure of the device or the Product can reasonably be expected to result in personal injury, death, or severe property or environmental damage (collectively "Unintended Uses"). Customers shall take any and all actions to ensure the Product meets the applicable laws and regulations. The Company is not liable for, in whole or in part, and customers shall hereby release the Company as well as its suppliers and/or distributors from, any claim, damage, or other liability arising from or related to all Unintended Uses of the Product. Customers shall indemnify and hold the Company, and its officers, employees, subsidiaries, affiliates as well as its suppliers and/or distributors harmless from and against all claims, costs, damages, and other liabilities, including claims for personal injury or death, arising from or related to any Unintended Uses of the Product.

Information in this document is provided solely in connection with the Product. The Company reserves the right to make changes, corrections, modifications or improvements to this document and the Product described herein at any time without notice. The Company shall have no responsibility whatsoever for conflicts or incompatibilities arising from future changes to them. Information in this document supersedes and replaces information previously supplied in any prior versions of this document.

© 2026 GigaDevice Semiconductor Inc. - All rights reserved